BLUE

Work Order ID 67244

Monday, March 14, 2011 10:20:04 AM

Item ID: D2724-041 **Accept** **Setup Start** **Stop**

Revision ID:

Item Name: 206L Step Assembly

Start Date: 3/14/2011 **Start Qty:** 2.00 **Cust Item ID:**

Required Date: 3/25/2011 **Req'd Qty:** 2.00 **Customer:**

Reference:

Approvals: **Process Plan:** CL **Date:** 11/03/14 **Tooling:** _____ **Date:** _____ **Run Start** **Stop**

QC: _____ **Date:** _____ **SPC (Y/N):** _____ **Date:** _____

Sequence ID/ Work Center ID	Operation Description	Set Up/ Run Hours	Tool ID	Tool #	Plan Code	Accept Qty	Reject Qty	Reject Number	Insp. Stamp
100	Large Fab	0.00							
Large Fab		0.00							
Large Fab	**Memo**								
Large Fab	Cut D2724-1 using D2622 extrusion as per Dwg D2724 Deburr and bevel ends for welding					11·04·06	2	ϕ	
110	Large Fab	0.00							
Large Fab		0.00							
Large Fab	**Memo**								
Large Fab	Weld end cap and lugs as per Dwg D2724 using Jig DT8884 followed by Jig DT (One End Only) A/R AL ROD Batch: M114703 Grind end cap welds flush M115928					11·04·10	2	ϕ	

Draw Nbr	Revision Nbr
D2724	Rev C

Dart Aerospace Ltd

W/O:		WORK ORDER CHANGES					
DATE	STEP	PROCEDURE CHANGE	By	Date	Qty	Approval Chief Eng / Prod Mgr	Approval QC Inspector

Part No: _____ **PAR #:** _____ **Fault Category:** _____ **NCR:** Yes No **DQA:** _____ **Date:** _____

Resolution: _____ **Disposition:** _____ **QA: N/C Closed:** _____ **Date:** _____

NCR:		WORK ORDER NON-CONFORMANCE (NCR)						
DATE	STEP	Description of NC Section A	Corrective Action Section B			Verification Section C	Approval Chief Eng	Approval QC Inspector
			Initial Chief Eng	Action Description Chief Eng	Sign & Date			

NOTE: Date & initial all entries

Work Order ID 67244

Monday, March 14, 2011 10:20:04 AM

Item ID: D2724-041 **Accept** **Setup Start** **Stop**

Revision ID:

Item Name: 206L Step Assembly

Start Date: 3/14/2011 **Start Qty:** 2.00 **Cust Item ID:**

Required Date: 3/25/2011 **Req'd Qty:** 2.00 **Customer:**

Reference:

Approvals: **Process Plan:** _____ **Date:** _____ **Tooling:** _____ **Date:** _____ **Run Start** **Stop**

QC: _____ **Date:** _____ **SPC (Y/N):** _____ **Date:** _____

Sequence ID/ Work Center ID	Operation Description	Set Up/ Run Hours	Tool ID	Tool #	Plan Code	Accept Qty	Reject Qty	Reject Number	Insp. Stamp
120	QC9- Inspect visual per QSI004- Fusion Welds	0.00				2	0		DB 04/04/13
QC	Memo	0.00							
Quality Control									
130	QC5- Inspect part completeness to step on W/O	0.00							
QC	Memo	0.00							
Quality Control									
140	Chemical Conversion Coat per QSI005 4.1	0.00							
HandFinish	Memo	0.00							
Hand Finishing									

Dart Aerospace Ltd

W/O:		WORK ORDER CHANGES					
DATE	STEP	PROCEDURE CHANGE	By	Date	Qty	Approval Chief Eng / Prod Mgr	Approval QC Inspector

Part No: _____ **PAR #:** _____ **Fault Category:** _____ **NCR:** Yes No **DQA:** _____ **Date:** _____

Resolution: _____ **Disposition:** _____ **QA: N/C Closed:** _____ **Date:** _____

NCR:		WORK ORDER NON-CONFORMANCE (NCR)						
DATE	STEP	Description of NC Section A	Corrective Action Section B			Verification Section C	Approval Chief Eng	Approval QC Inspector
			Initial Chief Eng	Action Description Chief Eng	Sign & Date			

NOTE: Date & initial all entries

H:\FORMS\Quality Assurance\approved QA\NCRWO RevE

Work Order ID 67244

Monday, March 14, 2011 10:20:04 AM

Item ID: D2724-041 **Accept** **Setup Start** **Stop**

Revision ID:

Item Name: 206L Step Assembly

Start Date: 3/14/2011 **Start Qty:** 2.00 **Cust Item ID:**

Required Date: 3/25/2011 **Req'd Qty:** 2.00 **Customer:**

Reference:

Run Start **Stop**

Approvals: **Process Plan:** _____ **Date:** _____ **Tooling:** _____ **Date:** _____

QC: _____ **Date:** _____ **SPC (Y/N):** _____ **Date:** _____

Sequence ID/ Work Center ID	Operation Description	Set Up/ Run Hours	Tool ID	Tool #	Plan Code	Accept Qty	Reject Qty	Reject Number	Insp. Stamp
150	QC3- Inspect Part Finish	0.00							
QC	**Memo**	0.00				2	BL	11-4-18.	
Quality Control									
160		0.00							
Large Fab	Large Fab								
Large Fab	**Memo**	0.00	11·04·19			2			
	Inspect for foreign object per QSI 024 Weld Remainig end cap as per Dwg D2724 using Jig DT8884 followed by Jig DT A/R AL ROD Batch: M114703 Grind per dwg D2724								
170	QC10- Inspect visual per QSI004- ground welds	0.00							
QC	**Memo**	0.00	11/04/25			~~12~~ 4			
Quality Control									

Dart Aerospace Ltd

W/O:		WORK ORDER CHANGES					
DATE	STEP	PROCEDURE CHANGE	By	Date	Qty	Approval Chief Eng / Prod Mgr	Approval QC Inspector

Part No: _____ **PAR #:** _____ **Fault Category:** _____ **NCR:** Yes No **DQA:** _____ **Date:** _____

Resolution: _____ **Disposition:** _____ **QA: N/C Closed:** _____ **Date:** _____

NCR:		WORK ORDER NON-CONFORMANCE (NCR)						
DATE	STEP	Description of NC Section A	Corrective Action Section B			Verification Section C	Approval Chief Eng	Approval QC Inspector
			Initial Chief Eng	Action Description Chief Eng	Sign & Date			

NOTE: Date & initial all entries

Work Order ID 67244

Monday, March 14, 2011 10:20:04 AM

Item ID: D2724-041 **Accept** **Setup Start**

Revision ID: **Stop**

Item Name: 206L Step Assembly

Start Date: 3/14/2011 **Start Qty:** 2.00 **Cust Item ID:**

Required Date: 3/25/2011 **Req'd Qty:** 2.00 **Customer:**

Reference:

Approvals: **Process Plan:** _____ **Date:** _____ **Tooling:** _____ **Date:** _____ **Run Start**

QC: _____ **Date:** _____ **SPC (Y/N):** _____ **Date:** _____ **Stop**

Sequence ID/ Work Center ID	Operation Description	Set Up/ Run Hours	Tool ID	Tool #	Plan Code	Accept Qty	Reject Qty	Reject Number	Insp. Stamp
180	QC5- Inspect part completeness to step on W/O	0.00							
QC	Memo	0.00							
Quality Control						x2 24			
190	Chemical Conversion Coat per QSI005 4.1	0.00							
HandFinish	Memo	0.00				BR 11-4-25.			
Hand Finishing									
205		0.00							
SprayPaint	Memo	0.00				11 04 27 (2)			
Spray Painting	Spray Painting: prime grey B: 117319 spray paint delfleet blue B: 115985 clear delfleet B:□□ 117113								

Dart Aerospace Ltd

W/O:		WORK ORDER CHANGES					
DATE	STEP	PROCEDURE CHANGE	By	Date	Qty	Approval Chief Eng / Prod Mgr	Approval QC Inspector

Part No: _____ **PAR #:** _____ **Fault Category:** _____ **NCR:** Yes No **DQA:** _____ **Date:** _____

Resolution: _____ **Disposition:** _____ **QA: N/C Closed:** _____ **Date:** _____

NCR:		WORK ORDER NON-CONFORMANCE (NCR)						
DATE	STEP	Description of NC Section A	Corrective Action Section B			Verification Section C	Approval Chief Eng	Approval QC Inspector
			Initial Chief Eng	Action Description Chief Eng	Sign & Date			

NOTE: Date & initial all entries

Work Order ID 67244

Monday, March 14, 2011 10:20:04 AM

Item ID: D2724-041 **Accept** **Setup Start** **Stop**

Revision ID:

Item Name: 206L Step Assembly

Start Date: 3/14/2011 **Start Qty:** 2.00 **Cust Item ID:**

Required Date: 3/25/2011 **Req'd Qty:** 2.00 **Customer:**

Reference:

Run Start **Stop**

Approvals: **Process Plan:** _____ **Date:** _____ **Tooling:** _____ **Date:** _____

QC: _____ **Date:** _____ **SPC (Y/N):** _____ **Date:** _____

Sequence ID/ Work Center ID	Operation Description	Set Up/ Run Hours	Tool ID	Tool #	Plan Code	Accept Qty	Reject Qty	Reject Number	Insp. Stamp
210	~~QC3~~ QC 14 Inspect Part Finish	0.00							
QC	Memo	0.00				1		11·04·28	
Quality Control									
220	Wing Walk as per dwg QSI005 4.4 Batch_____	0.00							
HandFinish	Memo	0.00				2		11/04/28	
Hand Finishing									
230	QC3- Inspect Part Finish	0.00							
QC	Memo	0.00						11/05/3	2
Quality Control									

Dart Aerospace Ltd

W/O:		WORK ORDER CHANGES					
DATE	STEP	PROCEDURE CHANGE	By	Date	Qty	Approval Chief Eng / Prod Mgr	Approval QC Inspector

Part No: _____ **PAR #:** _____ **Fault Category:** _____ **NCR:** Yes No **DQA:** _____ **Date:** _____

Resolution: _____ **Disposition:** _____ **QA: N/C Closed:** _____ **Date:** _____

NCR:		WORK ORDER NON-CONFORMANCE (NCR)						
DATE	STEP	Description of NC Section A	Corrective Action Section B			Verification Section C	Approval Chief Eng	Approval QC Inspector
			Initial Chief Eng	Action Description Chief Eng	Sign & Date			

NOTE: Date & initial all entries

H:\fFORMS\Quality Assurance\approved QA\NCRWO RevE

Work Order ID 67244

Monday, March 14, 2011 10:20:04 AM

Item ID: D2724-041
Revision ID:
Item Name: 206L Step Assembly

Accept

Setup Start
Stop

Start Date: 3/14/2011 **Start Qty:** 2.00
Required Date: 3/25/2011 **Req'd Qty:** 2.00
Reference:

Cust Item ID:
Customer:

Run Start
Stop

Approvals: **Process Plan:** _____ **Date:** _____ **Tooling:** _____ **Date:** _____
QC: _____ **Date:** _____ **SPC (Y/N):** _____ **Date:** _____

Sequence ID/ Work Center ID	Operation Description	Set Up/ Run Hours	Tool ID	Tool #	Plan Code	Accept Qty	Reject Qty	Reject Number	Insp. Stamp
240	Identify as per dwg & Stock Location:_____	0.00				67242		11/5/3068	
Packaging	Memo	0.00							
Packaging									
250	QC21- Final Inspection - Work Order Release	0.00						11/5/3068	
QC	Memo	0.00							
Quality Control									

PRP

MC 11-05-26

Dart Aerospace Ltd

W/O:		WORK ORDER CHANGES					
DATE	STEP	PROCEDURE CHANGE	By	Date	Qty	Approval Chief Eng / Prod Mgr	Approval QC Inspector

Part No: _____ **PAR #:** _____ **Fault Category:** _____ **NCR:** Yes No **DQA:** _____ **Date:** _____

Resolution: _____ **Disposition:** _____ **QA: N/C Closed:** _____ **Date:** _____

NCR:		WORK ORDER NON-CONFORMANCE (NCR)						
DATE	STEP	Description of NC Section A	Corrective Action Section B			Verification Section C	Approval Chief Eng	Approval QC Inspector
			Initial Chief Eng	Action Description Chief Eng	Sign & Date			

NOTE: Date & initial all entries

H:\fFORMS\Quality Assurance\approved QA\NCRWO RevE

Picklist Print

Monday, March 14, 2011 10:20:01 AM

Work Order ID: 67244

Parent Item: D2724-041

Parent Item Name: 206L Step Assembly

Start Date: 3/14/2011 **Required Date:** 3/25/2011

Start Qty: 2.00 **Required Qty:** 2.00

Comments: IPP Rev:E As Per Ecn 766 06-01-06 JLM

Component Item ID/ Item Name	Replacement Item ID	Mfg/ Purch	Bin Item	Primary Location	Last Location	Route Seq ID	Unit of Measure	Qty on Hand	Qty per Kit	Total Qty	Qty Issued	Date Issued	Status
D2622-120C Step Extrusion		Manufactured	No			100	Each	69.5110	1	2	11·04·06		
				Location			**Loc Qty**		**Loc Code**				
				WA			69.511						
					55214		1.92						
					58544		1						
					61208		4.724						
					64409		61.867			2			
D2734 Step End Plate		Manufactured	No			110	Each	76.0000	1	2	11·04·11		
				Location			**Loc Qty**		**Loc Code**				
				WA015			76						
					62931		1						
					66143		75			2			
D3458-1 Step Mounting Plate		Manufactured	No			110	Each	45.0000	2	4	11·04·09		
				Location			**Loc Qty**		**Loc Code**				
				WA018			45						
					51239		3						
					63075		42			4			

Dart Aerospace Ltd

W/O:		WORK ORDER CHANGES					
DATE	STEP	PROCEDURE CHANGE	By	Date	Qty	Approval Chief Eng / Prod Mgr	Approval QC Inspector

Part No: _____ **PAR #:** _____ **Fault Category:** _____ **NCR:** Yes No **DQA:** _____ **Date:** _____

Resolution: _____ **Disposition:** _____ **QA: N/C Closed:** _____ **Date:** _____

NCR:		WORK ORDER NON-CONFORMANCE (NCR)						
DATE	STEP	Description of NC Section A	Corrective Action Section B			Verification Section C	Approval Chief Eng	Approval QC Inspector
			Initial Chief Eng	Action Description Chief Eng	Sign & Date			

NOTE: Date & initial all entries

H:\fFORMS\Quality Assurance\approved QA\NCRWO RevE

Picklist Print

Monday, March 14, 2011 10:20:01 AM

Work Order ID: 67244

Parent Item: D2724-041

Parent Item Name: 206L Step Assembly

Start Date: 3/14/2011 **Required Date:** 3/25/2011

Start Qty: 2.00 **Required Qty:** 2.00

D3458-3 Step Mounting Plate	Manufactured	No	110	Each	48.0000	2	4	11·04·09

Location	Loc Qty	Loc Code	
WA018	48		
63076	48		4

D2734 Step End Plate	Manufactured	No	160	Each	76.0000	1	2	11·04·09

Location	Loc Qty	Loc Code	
WA015	76		
62931	1		
66143	75		2

Dart Aerospace Ltd

W/O:		WORK ORDER CHANGES					
DATE	STEP	PROCEDURE CHANGE	By	Date	Qty	Approval Chief Eng / Prod Mgr	Approval QC Inspector

Part No: _____ **PAR #:** _____ **Fault Category:** _____ **NCR:** Yes No **DQA:** _____ **Date:** _____

Resolution: _____ **Disposition:** _____ **QA: N/C Closed:** _____ **Date:** _____

NCR:		WORK ORDER NON-CONFORMANCE (NCR)						
DATE	STEP	Description of NC Section A	Corrective Action Section B			Verification Section C	Approval Chief Eng	Approval QC Inspector
			Initial Chief Eng	Action Description Chief Eng	Sign & Date			

NOTE: Date & initial all entries

H:\fFORMS\Quality Assurance\approved QA\NCRWO RevE

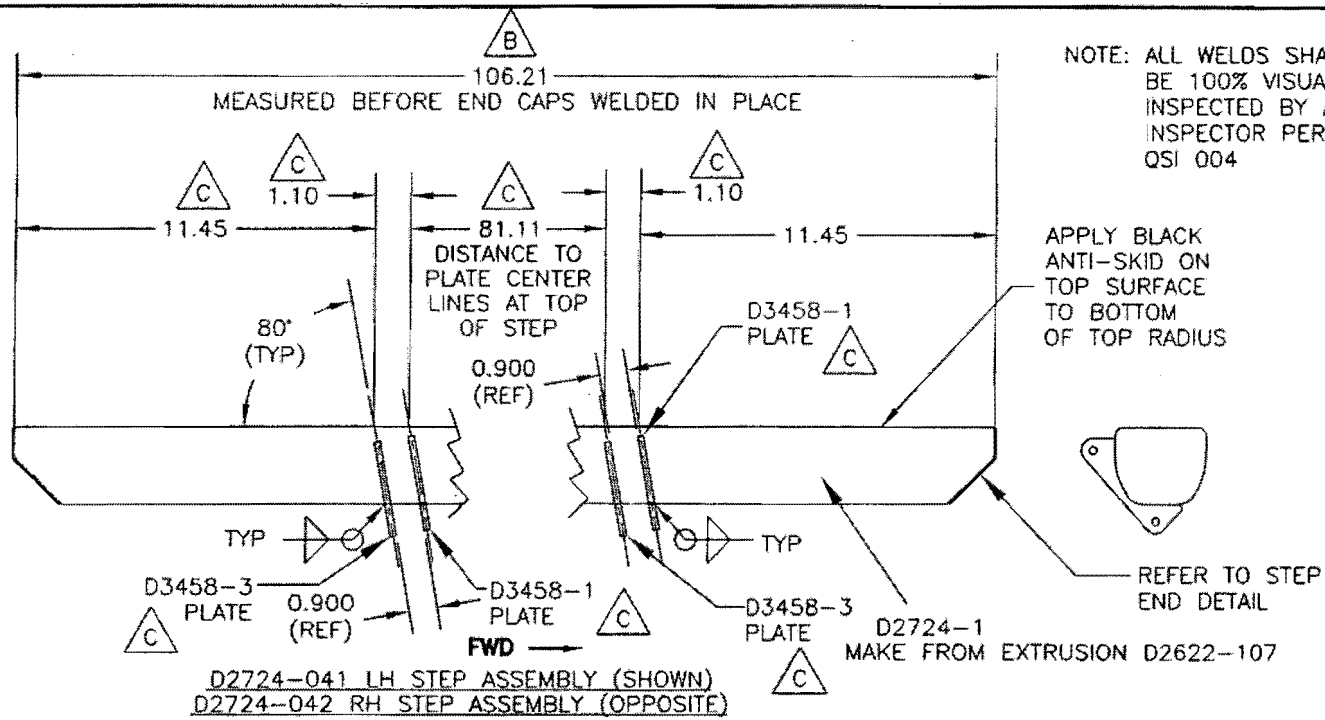

D2724-041 LH STEP ASSEMBLY (SHOWN)
D2724-042 RH STEP ASSEMBLY (OPPOSITE)

NOTE: ALL WELDS SHALL BE 100% VISUALLY INSPECTED BY A QUALIFIED INSPECTOR PER DART QSI 004

RELEASED 05.11.14

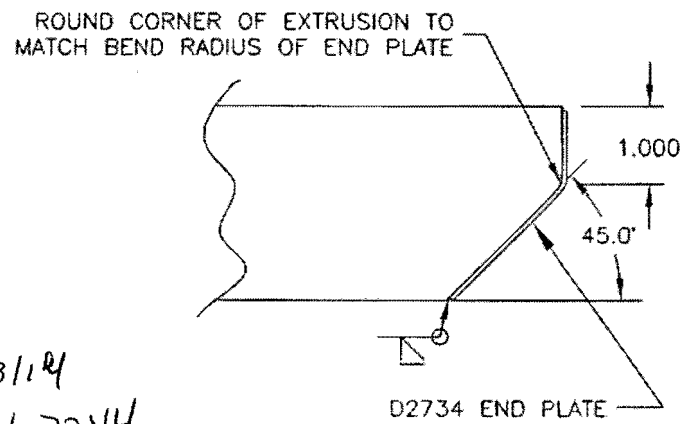

TYPICAL STEP END DETAIL
NOT TO SCALE B

D2721-041/-042 STEP ASSEMBLY PARTS LIST

QTY -041	QTY -042	PART NUMBER	DESCRIPTION
X		D2724-041	LH STEP ASSEMBLY
	X	D2724-042	RH STEP ASSEMBLY
1	1	D2622-107	EXTRUSION
2	2	D2734	END PLATE
2	2	D3458-1	PLATE
2	2	D3458-3	PLATE

CL11103/14
W10: 67244

D2724-041/-042 STEP ASSEMBLY

1) MAKE FROM EXTRUSION D2622
2) WELD PER DART QSI 004
3) FINISH: CHEMICAL CONVERSION COAT PER DART QSI 005 4.1
   POWDER COAT ASSEMBLY WHITE (4.3.5.1) PER DART QSI 005 4.3
   APPLY BLACK ANTI-SKID PAINT PER DART QSI 005 4.4
4) ALL DIMENSIONS ARE IN INCHES
5) ALL TOLERANCES ARE PER DART QSI 018 UNLESS OTHERWISE NOTED

A	97.12.04	NEW ISSUE
B	98.10.19	UPDATED WELD DETAIL REVISED TOLERANCES
C	05.09.19	RE-DESIGN, ADD D3458-1/-3

DESIGN: KE | DRAWN BY: PH | CHECKED | APPROVED | DATE: 05.09.19

DART AEROSPACE USA, INC.
PORT HADLOCK, WA

DRAWING NO. D2724 | REV. C
TITLE: 206L/407 STEP ASSEMBLY
SHEET 1 OF 1 | SCALE NTS

Copyright © 2005 by DART AEROSPACE USA, INC.
THIS DOCUMENT IS PRIVATE AND CONFIDENTIAL AND IS SUPPLIED ON THE EXPRESS CONDITION THAT IT IS NOT TO BE USED FOR ANY PURPOSE OR COPIED OR COMMUNICATED TO ANY OTHER PERSON WITHOUT WRITTEN PERMISSION FROM DART AEROSPACE USA, INC.

Dart Aerospace Ltd

W/O:		WORK ORDER CHANGES					
DATE	STEP	PROCEDURE CHANGE	By	Date	Qty	Approval Chief Eng / Prod Mgr	Approval QC Inspector

Part No: _____ **PAR #:** _____ **Fault Category:** _____ **NCR:** Yes No **DQA:** _____ **Date:** _____

Resolution: _____ **Disposition:** _____ **QA: N/C Closed:** _____ **Date:** _____

NCR:		WORK ORDER NON-CONFORMANCE (NCR)						
DATE	STEP	Description of NC Section A	Corrective Action Section B			Verification Section C	Approval Chief Eng	Approval QC Inspector
			Initial Chief Eng	Action Description Chief Eng	Sign & Date			

NOTE: Date & initial all entries

H:\FORMS\Quality Assurance\approved QA\NCRWO RevE